Center for Quantitative Fisheries Ecology

Protocol

Preparation of Otolith Transverse Thin-Sections for Age Estimation of

Spotted seatrout

Cynoscion nebulosus

Contents

Equipment and Supplies

Item	Model/Source	Number/Use
Leica MZ 95 or Leica MZ12 Stereo-microscope with transmitted light source and polarizing filter		1
Buehler® IsoMet™ low-speed saw	Model number 11-1280-160	1
Flanges, steel	6.03 cm diameter	2
Spacer, steel	0.5 mm thickness, 6.03 cm diameter	1
Norton® Diamond Grinding Wheel	1A1 3 x 0.006 x 1/2" ME120928, M3D220-N75M99-1/8, UPC/Cup: 69014192342	2
Allen wrench	1/8 in.	1
25 gram weights	Buehler/1180S33	1-2
Water for IsoMet™lubricant tray		approx. 300ml, unfiltered water
Ceramic top hot plate	Model number VWR 82026-752 115V, 1000W, 7x7"	1
Microscope slide [1 inch x 3 inches x 1.2 mm]	VWR 48318-0	1 per otolith plus 4-6 extras for "sectioning slide"
Microscope slide storage box	VWR 28511-012	1 per 100 otoliths
Aluminum slide tray	VWR 48467	1 per 20 otoliths
Barnes glass eye dropper and dropper bottle	VWR 14216-246	1
Stender dish with lid	VWR WLS 26155-C	1
Dissecting forceps	VWR 82027-398	1 fine point, 1 broad tip
Cordless precision engraver	General tools and instruments 505	1
Crystalbond 509-S	AREMCO Products Inc.	1/4 stick
Applicator stick		1
Flo-Texx® liquid cover slip	Lerner Laboratories	1 quart
Kimwipes® Delicate Task Wipers or VWR Light-Duty Tissue Wipers		1 box per work station for any spilled or Flo-Texx®
Razor blade		1 for removing remnants of Crystal Bond from microscope slides post-sectioning

Continued on next page

Table Continued from previous page

Item	Model/Source	Number/Use
CQFE spotted seatrout otolith storage box, cardboard		enclosed with labeled coin envelopes and microtubes containing individual fish's otoliths
Sharpie® Ultra Fine Point Permanent Marker		1
Hard-Part Processing Log		lists selected hard-parts to be processed, categorized alphabetically by species

Introduction

The following is a protocol for the preparation of sagittal otolith transverse cross-sections from spotted seatrout (*Cynoscion nebulosus*) for age determination. This protocol is to be used after the protocol for collecting biometric data and extracting whole sagittal otoliths. The protocol will first briefly introduce the structure of whole sagittal otoliths from spotted seatrout, and then describe the detailed processes of mounting and sectioning the otoliths, and mounting and storing the completed transverse cross-sections for age determination.

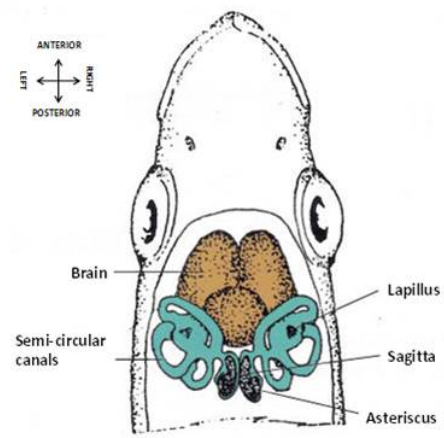

Figure 1: Position of otoliths within the vestibular apparatus of typical Teleost species, e.g. spotted seatrout (Secor et al. 1992).

Structure of whole sagittal otoliths

Three pairs of otoliths (sagitta, lapillus, and asteriscus) are located within the vestibluar apparatus of typical Teleost species (Figure 1). They all play important roles in the sensory systems of these fishes for mechanoreception and maintenance of equilibrium in their environment. The sagitta is the largest of the three and used for ageing finfish.

Like all sciaenids, spotted seatrout have extremely large sagittal otoliths relative to their body size. Their saggitae have a unique, tadpole-shaped sulcus acusticus (sulcus or sulcal groove) with an enlarged ostium anterior and tail-like cauda posterior (Figure 2). For purposes of this protocol, the sagittal otoliths will be referred to simply as "otoliths".

As in all finfishes, spotted seatrout otoliths are formed through biomineralization: specifically, the extracellular crystallization of calcium carbonate (primarily aragonite) onto an organic matrix which is composed of a keratin-like protein called "otolin" (Panfili et al. 2002).

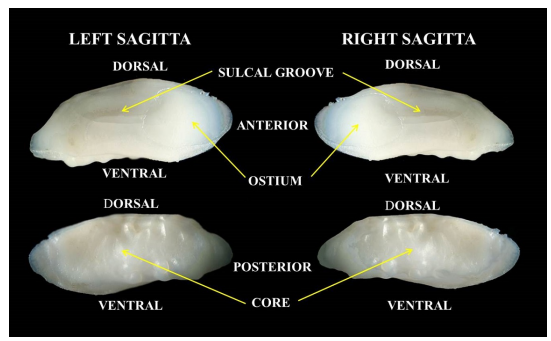

Figure 2: Extracted left and right sagittal otoliths of spotted seatrout labeled to illustrate orientation and basic structure (The otoliths are positioned at the proximal facing front).

Otolith formation begins early in the development of a fish, typically at the hatch-date of the larvae. The initial structure that is mineralizied is called the primordium, or primordia, which fuses to form the otolith core. This core is the foundation on which all new otolith growth occurs. Concentric layers of the protein and calcium carbonate matrix accrete, or grow, outward from the core throughout the lifetime of the fish. This results in a structure that is comparable to that of an onion.

Within the otolith matrix, aragonite is precipitated at varying rates throughout each

year. Periods of slower growth in the fish, i.e., colder seasons of the year, are characterized by densely-packed precipitate. The core and opaque layers of the otolith, visible under transmitted light, represent such growth. Periods of faster growth in the fish, i.e., warmer seasons of the year, involve less-densely compacted mineralization of the precipitate and are seen as translucent layers of the matrix when viewed in transmitted light.

The collection of successive opaque and translucent layers within the otolith can be made fully visible when a transverse cross-section (hereafter referred to as "thin-section") is removed from the core region (Figure 3) and viewed through a stereomicroscope. Each of the opaque and translucent layers within the otolith constitutes an annulus, which occurs once per year. For

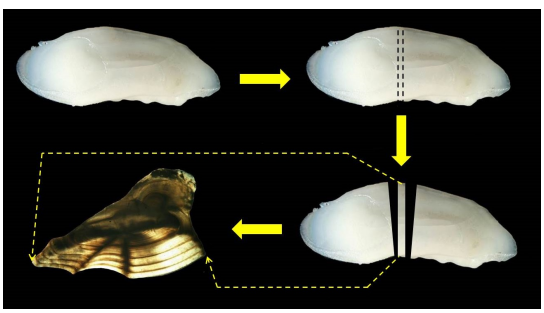

Figure 3: Spotted seatrout otolith, thin-section removal, and visible annuli within the section under transmitted light.

the purposes of age determination, only the opaque layers encircling the core are called annuli. They are counted from the core towards the outer-edge of the otolith thin-section.

Mounting Otoliths for Sectioning

First turn on the hot plate. Each of the hot plates have a recommended temperature setting marked previously with black Sharpie®. For example, the VWR brand hot plate setting is marked at ∼1.5 and the Corning at ∼3.5.

Place $\frac{1}{4}$ stick of Crystalbond® 509 (hereafter referred to as "Crystalbond") into a Stender dish. Place the dish on the hot plate surface. While the hot plate is warming to its recommended temperature, refer to the Hard-Part Processing Log and identify the hard-part that has been selected for processing. Remove the coin envelope with the appropriate spotted seatrout Age and Growth ID number (AGID) from the CQFE spotted seatrout otolith storage box. The AGID is located on the lower right-hand corner of each envelope.

When the hot plate has reached its proper temperature and the Crystalbond has become easy to manipulate, place a microscope slide (hereafter referred to as "slide") on the hot plate surface. Using an applicator stick, evenly spread the semi-liquid Crystalbond on the slide. Place another slide on top of the Crystalbond covered slide, makeing a slide-Crystalbond-slide sandwich. Press the slides together with the applicator stick to evenly distribute the semi-liquid Crystalbond. Hereafter, this will be referred to as a "sectioning slide".

Using tweezers, set the sectioning slide aside on the table to cool to room temperature. Remove an otolith from the coin envelope. When the sectioning slide is cool to the touch, use the applicator stick to place the semi-liquid Crystalbond in the center of the third quarter of the sectioning slide to make a base of Crystalbond. The amount of the Crystalbond base needed is roughly equal to the volume of the otolith that will be sectioned.

Mount the otolith, with the proximal facing up, half way into the Crystalbond base. Make sure that the dorsal and ventral sides of the otolith lie parallel to the long edge of the slide and perpendicular to the short

edges. Apply a layer of the semi-liquid Crystalbond on top of the tips of the anterior and posterior of the otolith to secure them in place. Set the sectioning slide, with the mounted otolith, on the table until it is cool and the otolith is firmly locked in the Crystalbond.

With a pencil, draw a straight line on the otolith to indicate the path the saw blades will follow (This step may be done before mounting the otolith on the slide). The lines should set-up the cut so that the position of the core is found within the thin-section to be removed from the otolith. The core is located at the posterior portions of the sulcal groove and close to the ostium. Two black dash lines are marked in Figure 3 and a pencil mark is placed on otolith in Figure 4 to indicate this position. The line should be perpendicular to the sulcal groove and just next to, but not overlapping, the tadpole head-like lobes of the ostium. When sectioning, the saw blades should fall on either side of the pencil line.

Figure 4: Spotted seatrout otolith marked with cut line mounted on a sectioning slide.

Sectioning otoliths

Before cutting the otolith, make sure that the Buehler® IsoMet™ low speed saw (hereafter IsoMet™ saw) is set-up correctly. From left to right on the drive-shaft there should be a shaft spacer and slinger followed by an inner flange, a Norton® diamond blade (Figure 5), a 0.5 mm spacer, an additional Norton® diamond blade, an outer flange, and an end cap bushing. The previous items are fixed to the drive shaft by a hand-tightened thumb screw (Figure 6). The saw's lubricant pan should be filled with unfiltered water and the specimen basket should be in place (Figure 7).

Figure 5: Norton® Diamond Grinding Wheel.

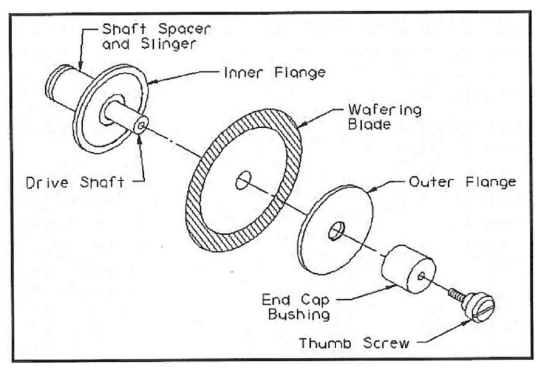

Figure 6: IsoMet™ low speed saw blade installation diagram, showing the order flange and Norton® Diamond Grinding Wheel placement on the drive shaft. Note, that in our procedure we use a 0.5 mm spacer between two Norton® Diamond Grinding Wheels (modified from Buehler® IsoMet™ Low Speed Saw Manual).

Place the sectioning slide with the whole otolith in crystalbond and marked with pencil into the chuck of the saw's support arm (Figure 8), gently secure it using the allen wrench. Once the slide is secured

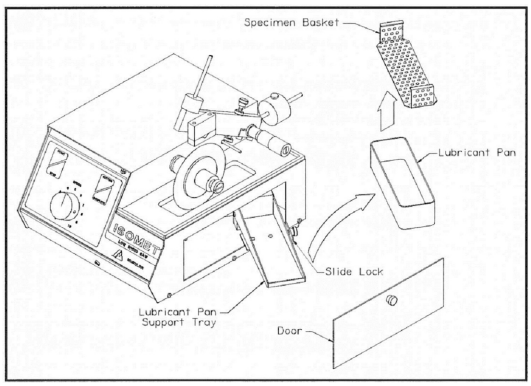

Figure 7: IsoMet^{TM} saw lubrication pan diagram (Buehler® IsoMet^{TM} Low Speed Saw Manual).

within the chuck, use the micrometer (Figure 9) to align the support arm and bring the cut line marked on the otolith into position between the two Norton® Diamond Grinding Wheels (hereafter referred to as "blades"). The line should run completely parallel to both blades, and fall directly within the 0.5 mm space between them (Figure 10).

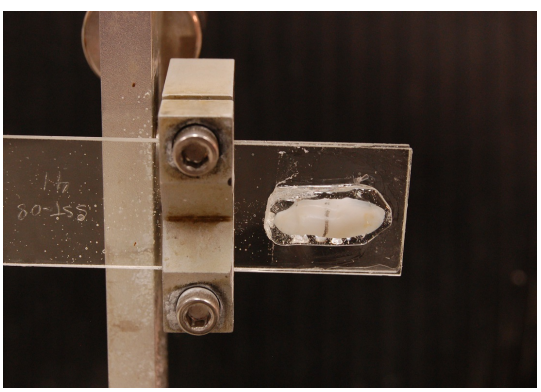

Figure 8: The sectioning slide with otolith secured in crystalbond is mounted in the chuck of the saw arm.

When all of the IsoMet^{TM} saw specifications have been met, it is safe to start sectioning the otolith. Before moving the support arm and marked otolith down on to the blades, start the saw at a speed of 3 or 4. Once the blades have begun spinning, gently move the support arm downward onto the blades, bringing the secured otolith into contact with the blades. Allow the blades to cut at this speed for several seconds. Once the blades have established a groove, bring the saw speed up to 7 or 8.

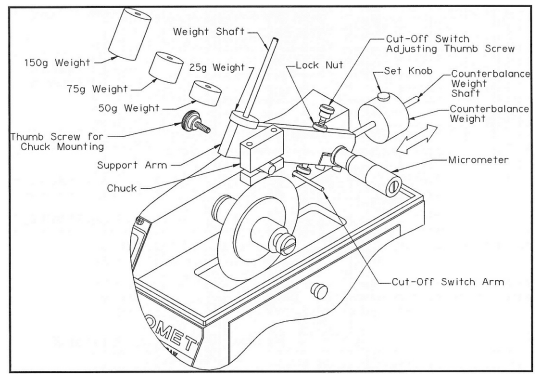

Figure 9: IsoMet^{TM} saw weight-balanced diagram (Buehler® IsoMet^{TM} Low Speed Saw Manual).

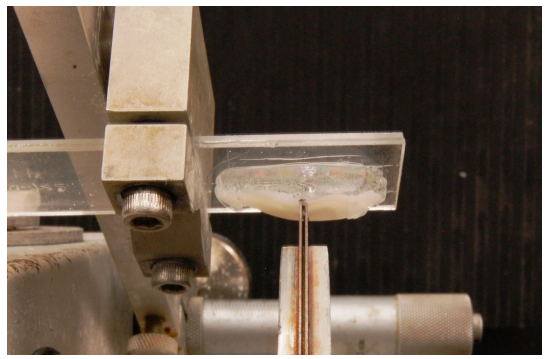

Figure 10: The pencil mark is lined up right between 2 blades.

The cutting time varies with otlith size, saw speed, and weight. The cutting time can be decreased by adding up to 50 grams of weight to the weight shaft at any point during the sectioning process. Increasing the saw speed will also decrease the amount of time per otolith. spotted seatrout otoliths are fairly robust and can withstand higher speeds than the 7 or 8 setting.

Note that additional weight and speed could increase the risk of damaging the saw blades and/or

the otolith sections. Technicians must use their discretion, based on personal experience, in sectioning otoliths to maintain quality and safety.

While the blades are still cutting the otolith, using a cordless precision engraver, engrave a clean slide on the left end with the abbreviation name of spottedseatrout (CRK), AGID (e.g. 002), VMRC, and the year abbreviation (e.g. 14 for 2014). This slide will be used for mounting the thin-section being cut.

Monitor the cutting progress of the blades through the otolith. From the back of the slide, you can view the otolith matrix becoming thinner as the blades near the Crystalbond base and the underlying glass of the sectioning slide. When you see that the blades have gone completely through the matrix and are visible on either side of the thin-section being removed, carefully raise the support arm from the saw blades and turn off the IsoMet^{TM} saw.

The just cut thin-section should remain suspended in the Crystalbond between the separated halves of the otolith. Use tweezers to carefully remove the thin-section from between the two halves. If the thin-section is not located between two halves of the otlith, the thin-section either is stuck between the blades or has fallen into the lubricant water. In the first situation, remove the thumb screw and the outer flange from the drive shaft. Pull the two blades and spacer off of the drive shaft and lay them flat on your palm or on the work table. Separate the top blade from the spacer and the inner blade and search for the thin-section on the spacer side of the blades. In the second situation, pull out the lubricant pan, lift the specimen basket out off water, search for the thin-section, and collect it using tweezers.

Mounting otolith thin-section

Before permanently mounting the otolith thin-sections, look at them under the Leica stereomicroscope to make sure that the section must include the core. The sulcal groove should meet the core at a precise angle such that all annuli can be seen from the origin to the edge of the otolith, and sectioned sulcal groove has a "V" shape (Figure 11).

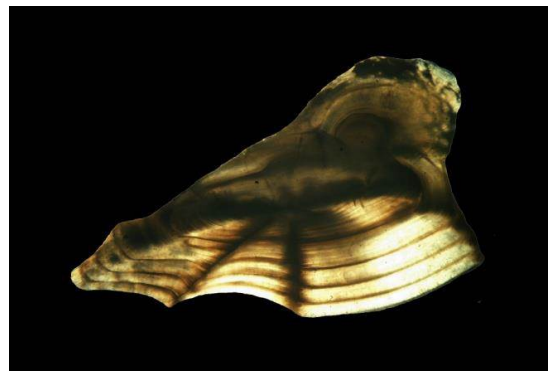

Figure 11: Completed transverse thin-section with a "V" shape of sectioned sulcal groove (positioned as the opening of the "V" downward on the slide), indicating that the cut went through the core.

If the sulcal groove and the core do not come together to form a point, and the sectioned sulcal groove looks like a "tornado" shape, then, the cut was placed too far from the ostium (Figure 12).

If the sulcal groove does not come together to form a point, and the sectioned sulcal groove looks like a "dome" shape, then, the cut was placed too close to the ostium (Figure 13).

A section with a correctly executed cut should have no chips or other imperfections that eliminate or obscure views of the core, sulcal groove, or annuli. Sections not meeting these specifications must be re-cut. The second section may be obtained from either of the two halves of the first otolith (depending on where the first section misses

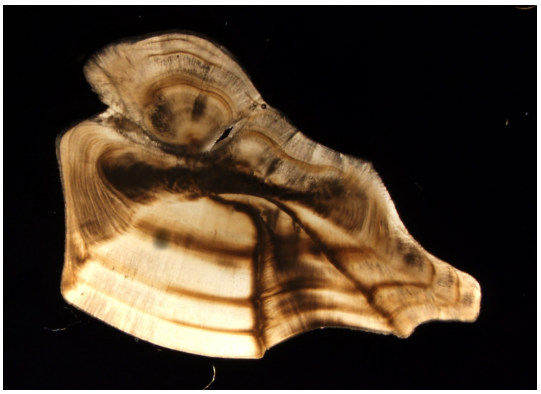

Figure 12: A transverse thin-section with a "tornado" shape of sectioned sulcal groove (showing the opening down here), indicating that the cut misses the core and is far away from the ostium.

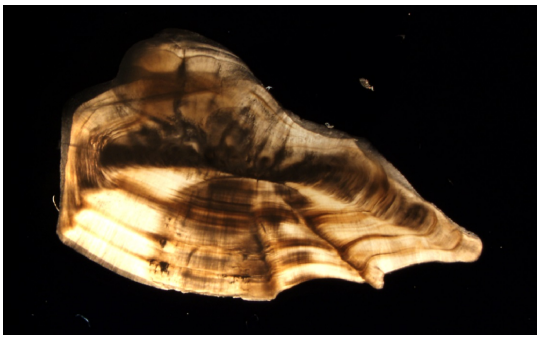

Figure 13: A transverse thin-section with a "dome" shape of sectioned sulcal groove, indicating that the cut misses the core and is too close to the ostium.

the core), but the second otolith may also be used if necessary. When you have verified the section's quality, place the best surface of the thin-section facing upwards and ensure the section is siting flat on the slide engraved previously. Make sure that the opening of the "V" shape is positioned facing the long edge of the slide while the engraved end faces to the left of reader.

When the section is clean and dry, protect it with Flo-Texx®, a liquid cover slip. Use an eyedropper to put a small amount of Flo-Texx® over the section and spread it in a circular motion. Eliminate bubbles within the Flo-Texx® by popping them or moving them away from the thin-section using tweezers. The Flo-Texx® is used as the mounting medium to both protect the thin-section and increase its clarity. Place the completed slide on an aluminum slide tray and allow the Flo-Texx® to air-dry on the thin-section for several hours (until solidified).

Now that the quality of the section has been verified and the slide has been placed aside to dry, use a razor blade to remove the two halves of the otolith with the surrendering crystalbond off from the sectioning slide. Clean the crystalbond from the two halves of the otolith and the sectioning slide, then, collect and put it back into the Stender dish for re-usage. Place the two halves of the otolith back into the coin envelope from which they came, and re-use the sectioning slide for next otolith.

Storing otolith thin-sections

Using a fine point black Sharpie®, write the abbreviation name of spotted seatrout (CRK) and fish ID (002) in the upper right-hand corner (opposite to the engraved end) on the long side of the slide edge (This step may be done while engraving the slide). Figure 14 shows the final otolith thin-section slide correctly labeled with abbreviation of species name, fish ID, VMRC, and collection year. Store the slides in a labeled slide box (Figure 15) with the black Sharpie® AGID facing upwards for easy identification during age determination.

Figure 14: Completed spotted seatrout otolith thin-section, labeled appropriately with species code and AGID.

Figure 15: Otolith slide storage box, labeled for spotted seatrout.

Literature Cited

Panfili, J., Rontual, H. Troadac, H., Wright, P. 2002. Manual of Fish Schlerochronology, pp35.

Secor, D.H., Dean, J.M., and Laban, E.H. 1992. Otolith removal and preparation for microstructural examination. In Otolith microstructure examination and analysis (Stevenson, D.K. and Campana, S.E., ed.).

Buehler® IsoMet™ Low Speed Saw Manual. Model MA111280_16.1 as of 6/8/2009.

Photographs

James Davies, Karen Underkoffler, Christina Morgan, and Jessica Gilmore.

Prepared by

James Davies, William Persons, Christina Morgan, Hongsheng Liao, Cynthia Jones,Steve Bobko, Eric Robillard, Karen Underkoffler, and Jessica Gilmore.

Production date

September 28, 2015